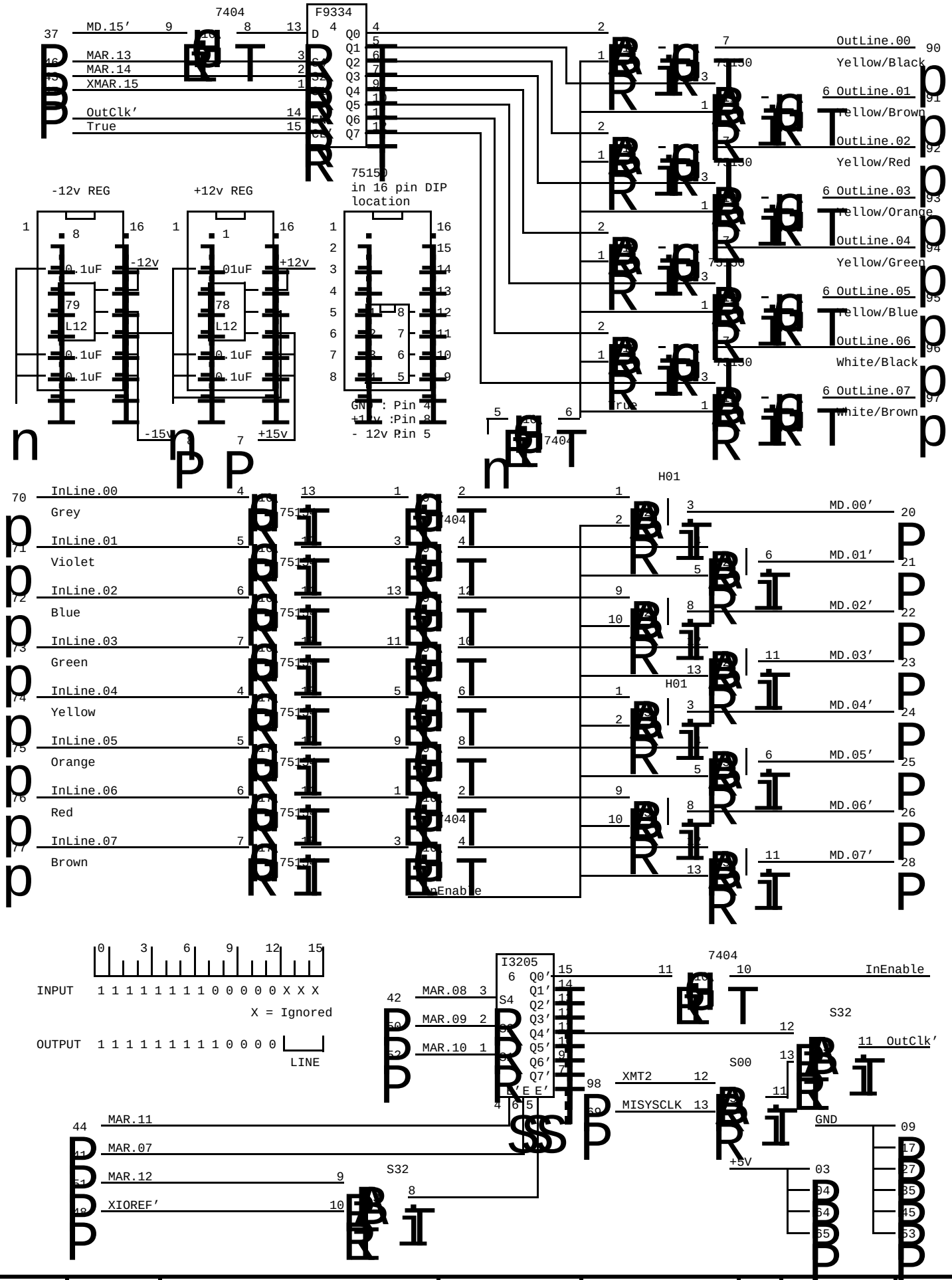

XEROX CSL	Project MiniDLS	8-Line Data Line Scanner	File MiniDLS01.sil	Designer Thacker/Taft	Rev B	Date 6/13/82	Page 1